

Wurmple

by Brandon

PaperPokés

www.pokemonpapercraft.net

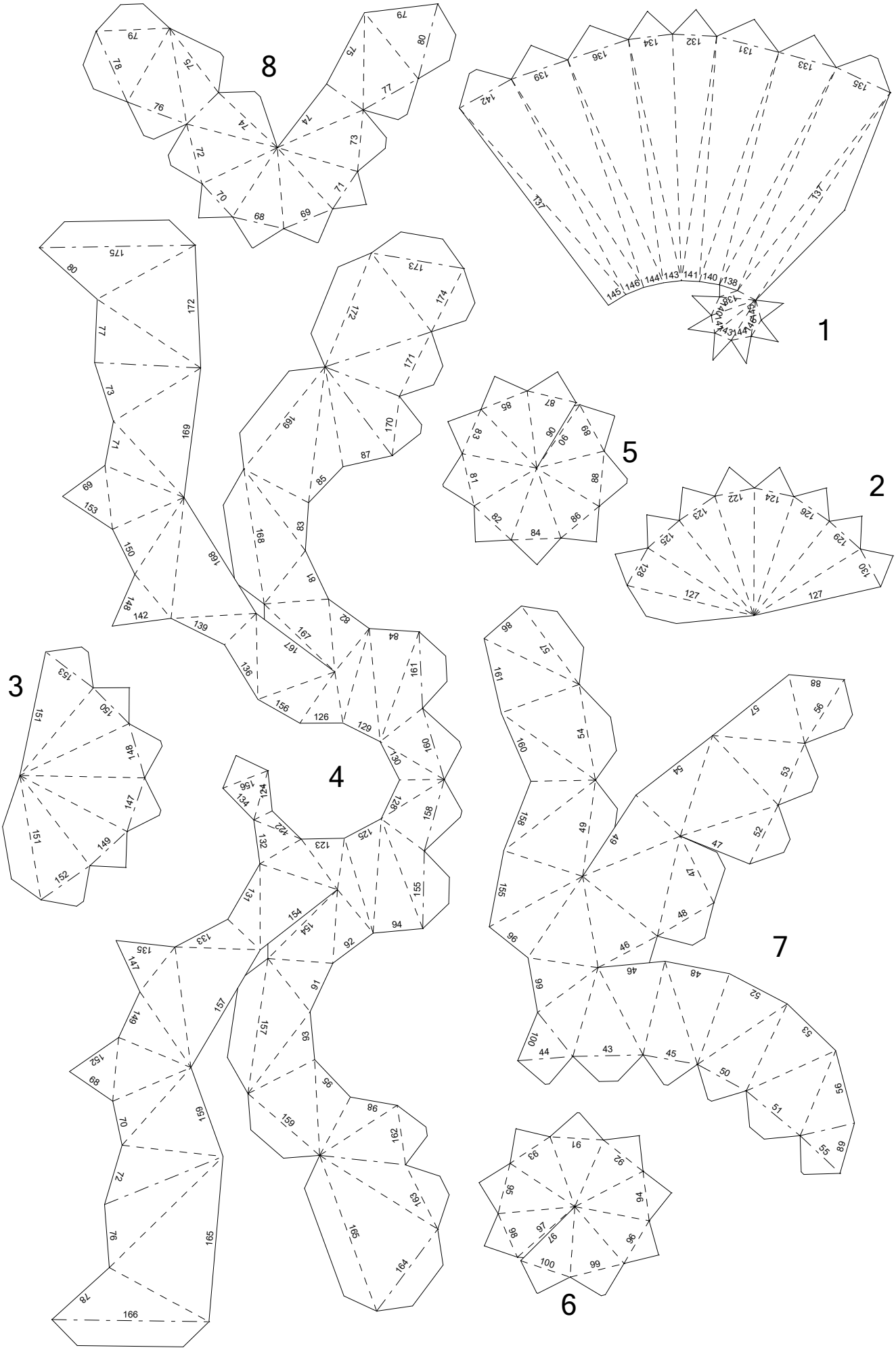
1
2
3
4
5
6
7
8

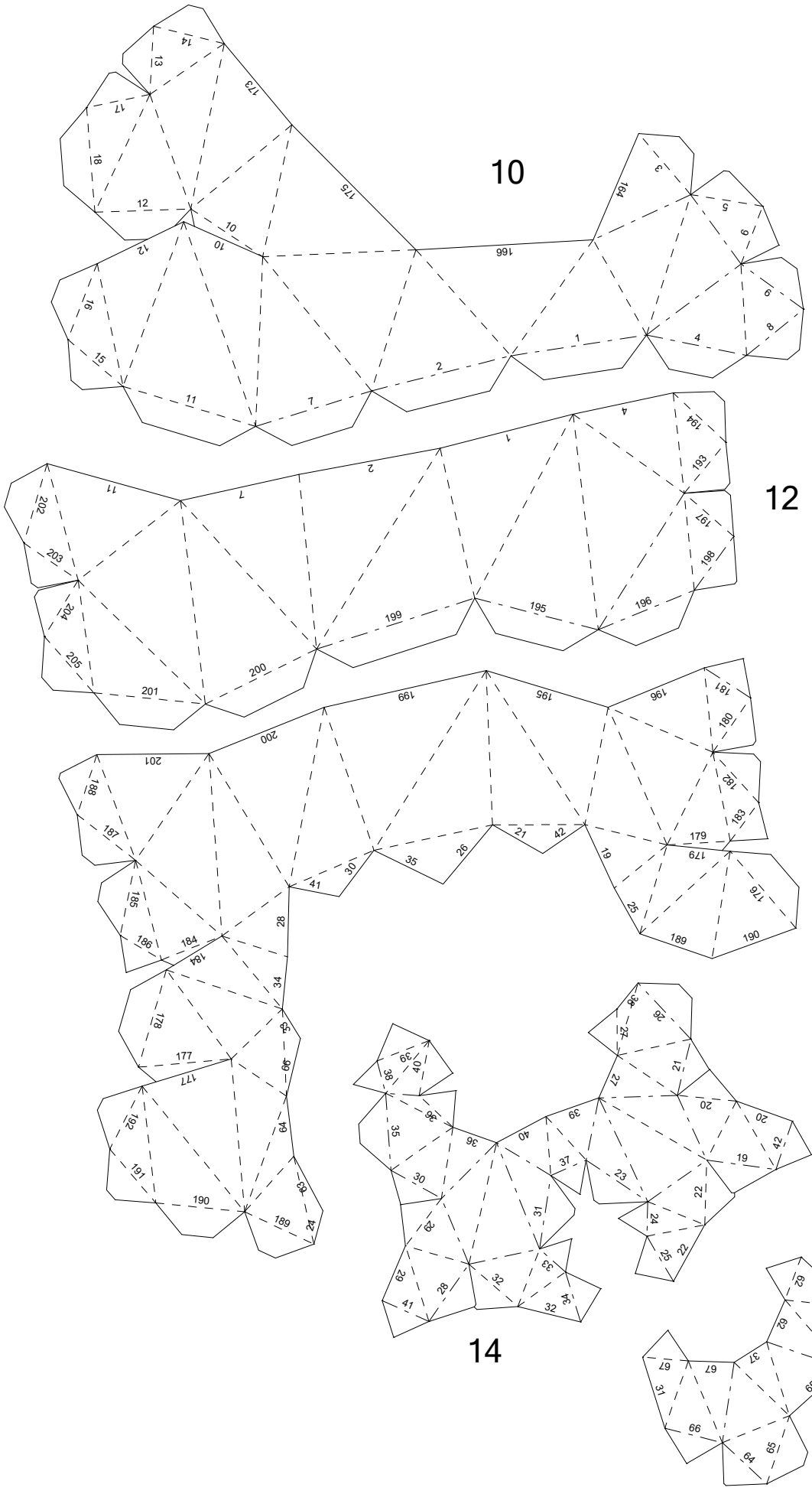
10
12
16
14
15

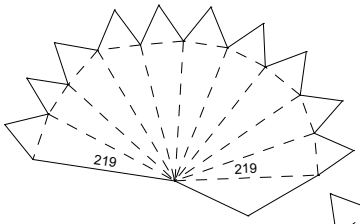

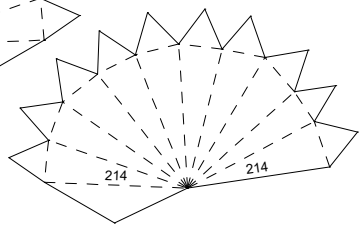

30-31

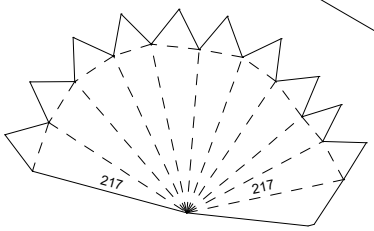

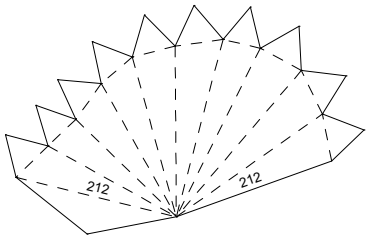

32-33

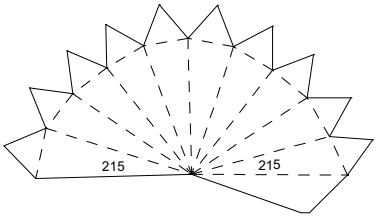

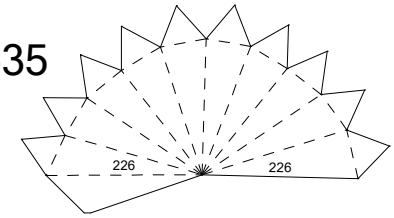

34-35

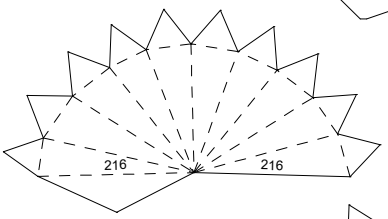

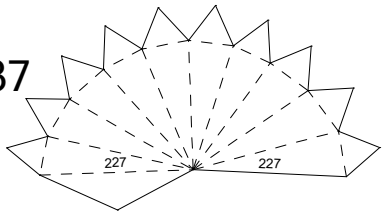

36-37

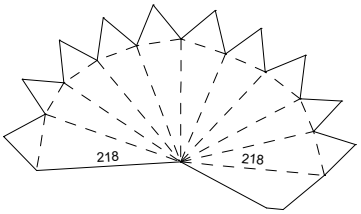

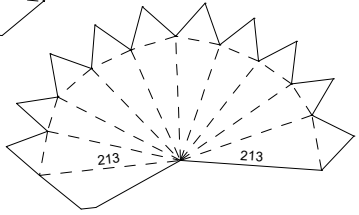

38-39

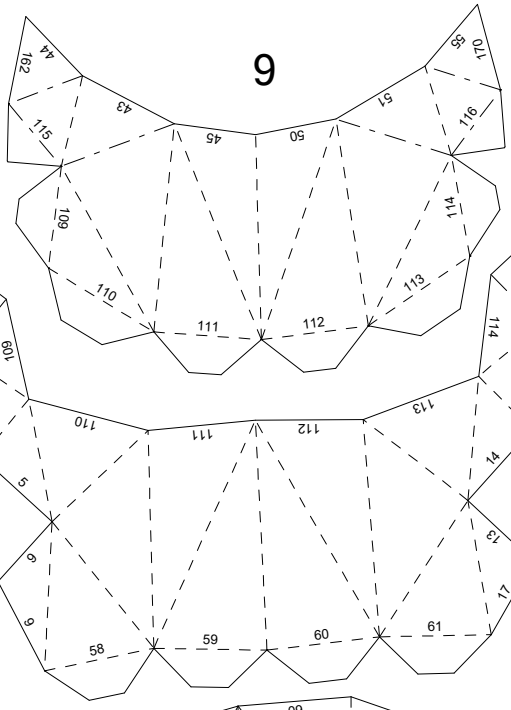

11

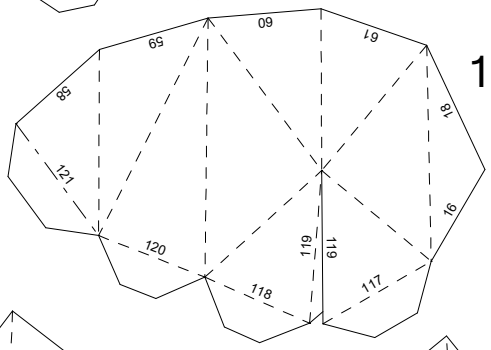

13

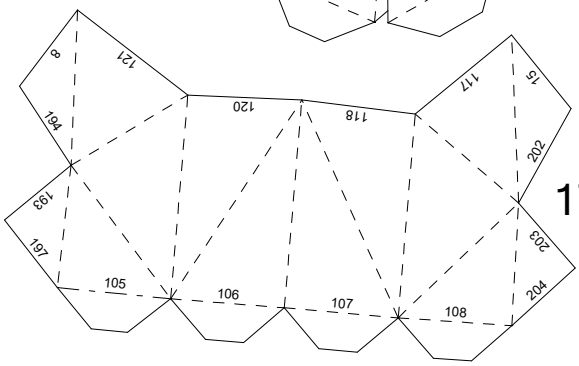

17

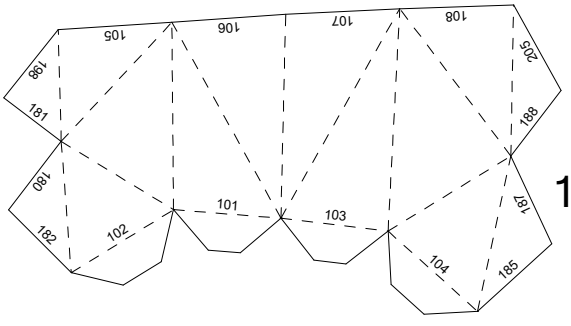

18

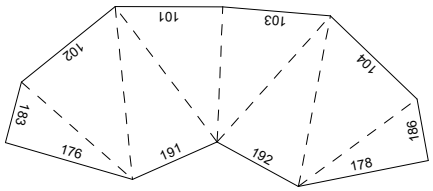

19

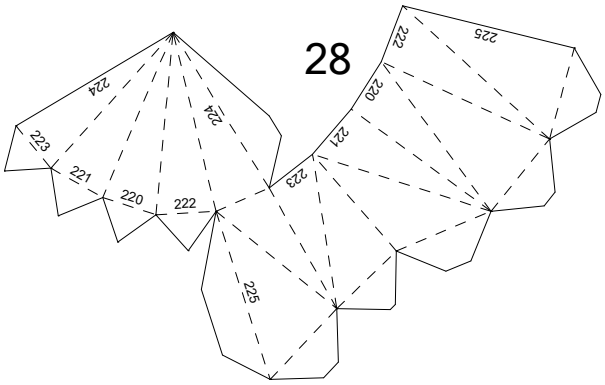

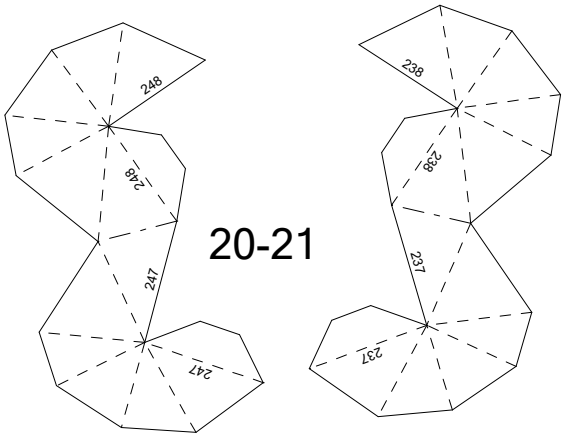

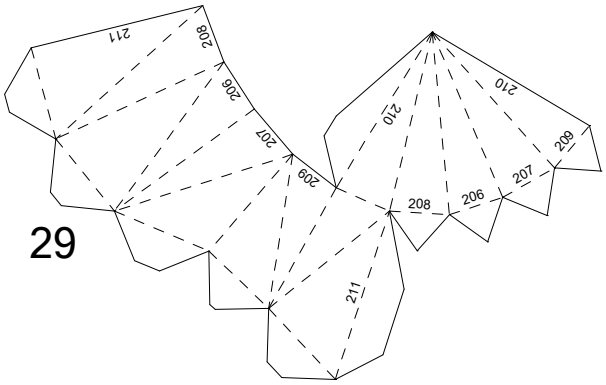

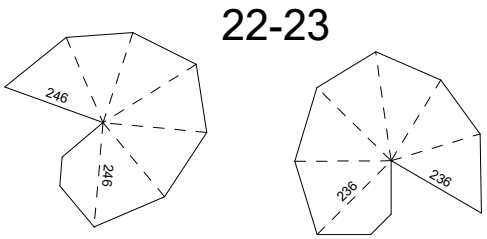

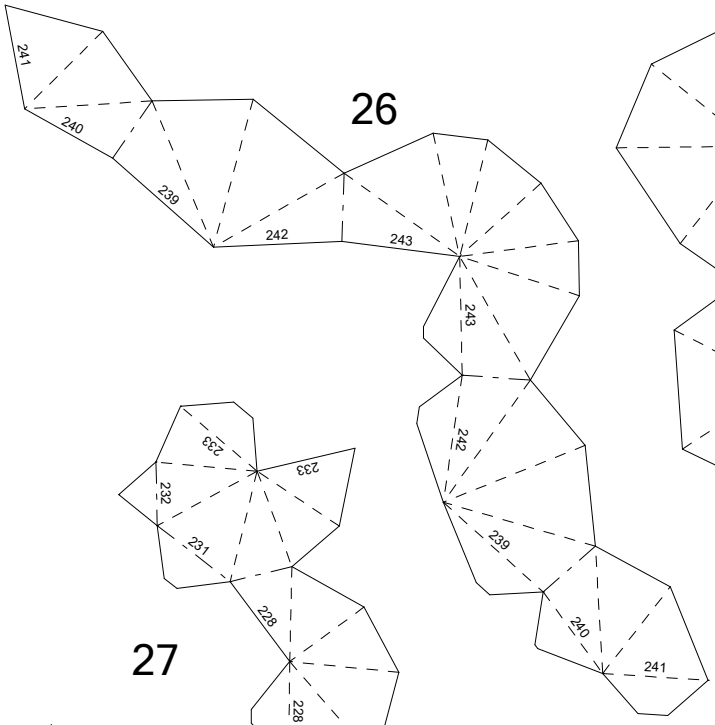

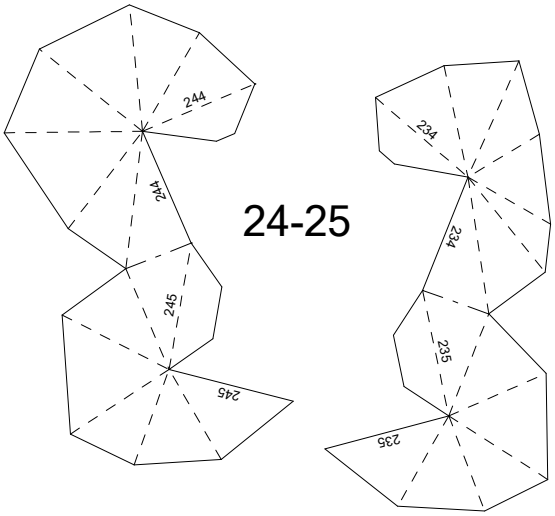

For the red pieces
on this page, flare
out the edges and
add slight amounts of glue
to attach them to the body